INF 1001
INTRODUCTION TO COMPUTING

More Combinatorial Circuits and Sequential Circuits

Lecture 4

Prof. Vinod Prasad
Email: vinod.prasad@singaporetech.edu.sg
https://apvinod.github.io

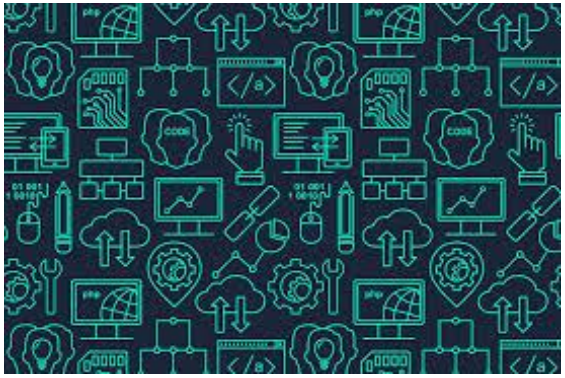

Outline

- Arithmetic Circuits
- Multiplexer, Shift Register, Comparator
- Basic memory element: Flip-flop

Adder Circuit

In hardware, an ADDER is used to add each set of bits:

Half Adder: Adds 2 single bits. Gives SUM and CARRY.

Addition of two binary bits.

A	B	A + B	SUM	CARRY
0	0	0 + 0	0	0
0	1	0 + 1	1	0
1	0	1 + 0	1	0
1	1	1 + 1	0	1

Full Adder: Adds 2 single bits and a carry input.
Gives SUM and CARRY OUT.

How do we implement Adder circuit using logic gates?

Adder Circuit

It is possible to create a logical circuit using multiple full adders to add *N*-bit numbers.

Each full adder inputs a C_{in}, which is the C_{out} of the previous adder.

This kind of adder is a ***ripple carry adder***, since each carry bit "ripples" to the next full adder.

Ripple carry adders are very slow for wide operands since the longest path stretches from the least significant bit to the most significant bit. Hence, the maximum time to add is proportional to the number of bits.

More advanced adder using the ***carry-look-ahead*** method is much faster and independent of the bit length, however, it requires a lot more logic gates.

Ripple Carry Adder

- The basic logic circuit of a ripple carry adder is a half-adder.
- Using 2 half-adders, a full adder can be constructed.

How to add two binary numbers?

```
  1 1 1 1  1 1 1
  0111 1111
+ 0000 0001
-----------
  1000 0000
```

Step 1: You start adding the 2 LSB bits ($A_0 + B_0$) of A and B. This will produce a 1 bit sum output (S_0) and 1 carry-out bit (C_0).

Step 2: You start adding the next three bits (you notice is 3-bit as you need to consider any carry-in), two bits are (A_1 and B_1) as well as any carry in from the previous bit. This will produce another sum output bit and a carry-out bit. All subsequent bits are added in the same manner.

$$
\begin{array}{rl}
 & A_7A_6A_5A_4\ A_3A_2A_1A_0 \\
+ & B_7\ B_6\ B_5B_4\ B_3B_2B_1B_0 \\
\hline
 & S_7\ S_6\ S_5\ S_4\ S_3\ S_2\ S_1\ S_0
\end{array}
$$

Half adder

Full adder

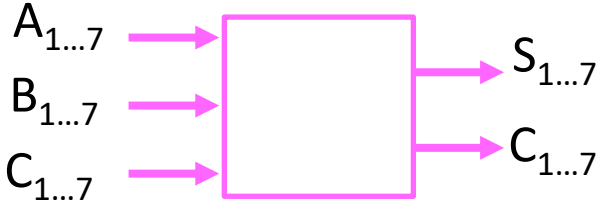

Half Adder

Truth Table

Inputs		Outputs	
A	B	Sum	Carry
0	0	0	0
0	1	1	0
1	0	1	0
1	1	0	1

XOR AND

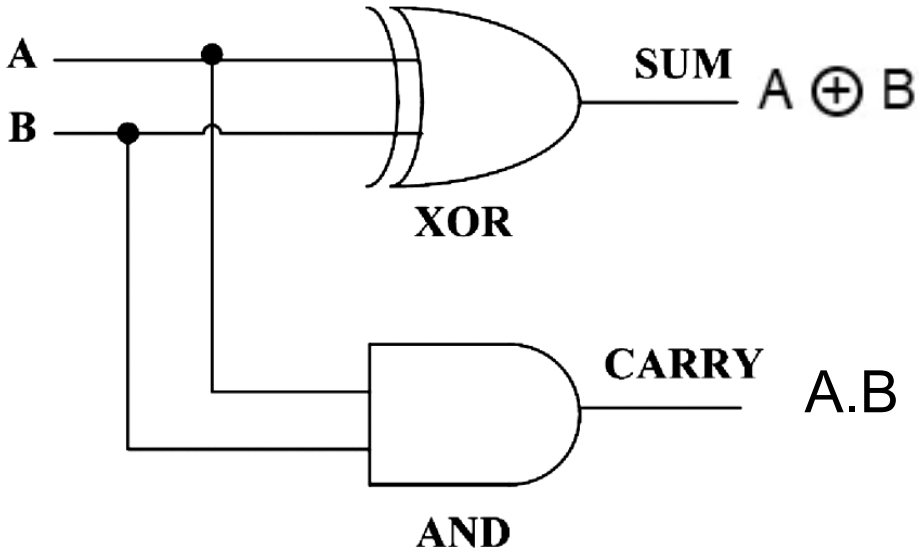

Full Adder

Truth Table

Inputs			Outputs	
A	B	C_{in}	Sum	Carry
0	0	0	0	0
0	0	1	1	0
0	1	0	1	0
0	1	1	0	1
1	0	0	1	0
1	0	1	0	1
1	1	0	0	1
1	1	1	1	1

$$Sum=(A\oplus B)\oplus C_{in}$$

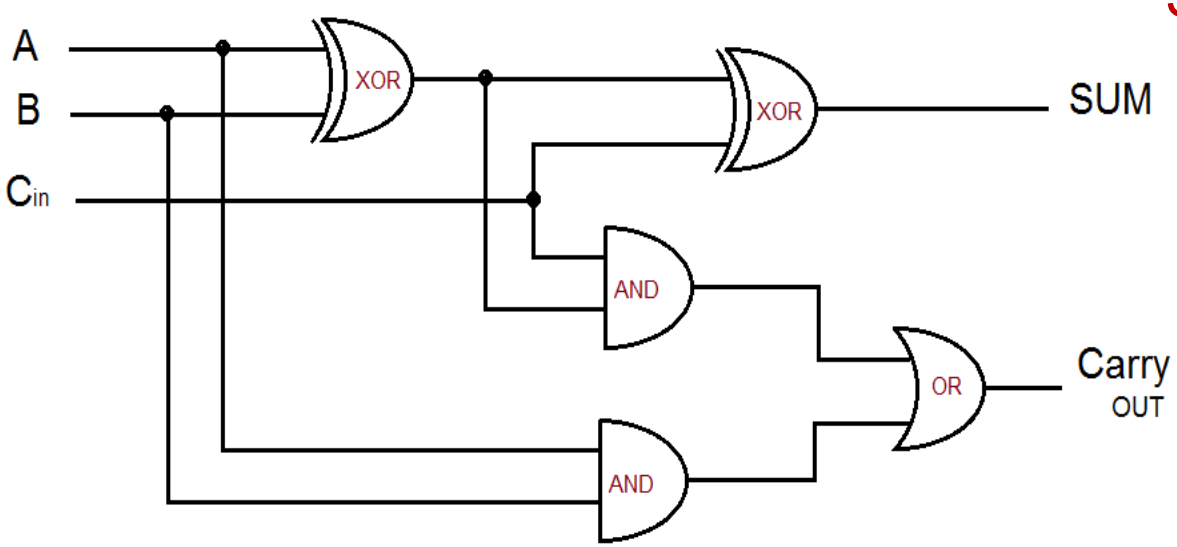

$$C_{out}=AB + C_{in}\ (A\oplus B)$$

Needs to apply Boolean simplification to obtain these expressions.

N-bit Adder (Ripple Carry Adder)

- Multiple full adders can be chained together to add **N-bit** numbers.
- Each full adder has its inputs C_{in} connected to the C_{out} of previous adder.
- Each carry bit "ripples" to the next full adder.
- Ripple carry adders are slow for adding input with many bits.
  - Since the carry needs to be propagated along the ***longest path*** from the **LSB** to the **MSB**, the ***delay is proportional to the bit length*** to be added.

A 4-bit Ripple Carry Adder Schematic

$$\begin{array}{r} A_3A_2A_1A_0 \\ +\ B_3B_2B_1B_0 \\ \hline S_3\,S_2\,S_1\,S_0 \end{array}$$

$$\begin{array}{r} 1\,0\,1\,0 \\ +\,0\,1\,0\,1 \\ \hline 1\,1\,1\,1 \end{array}$$

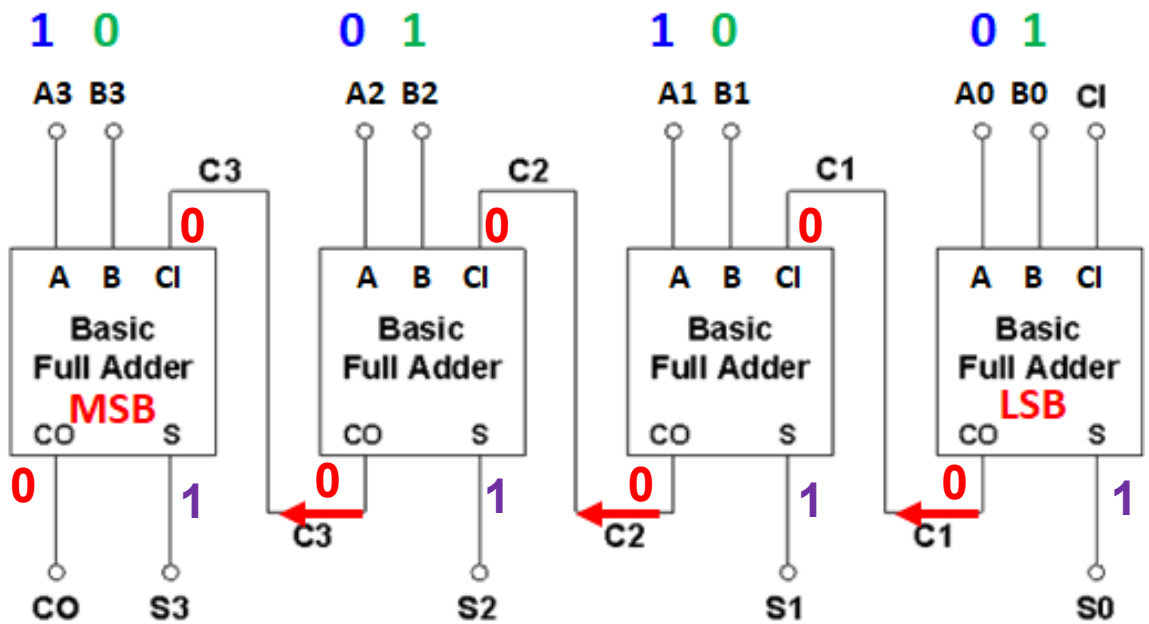

A 4-bit Ripple Carry Adder – Logic Gate Realization

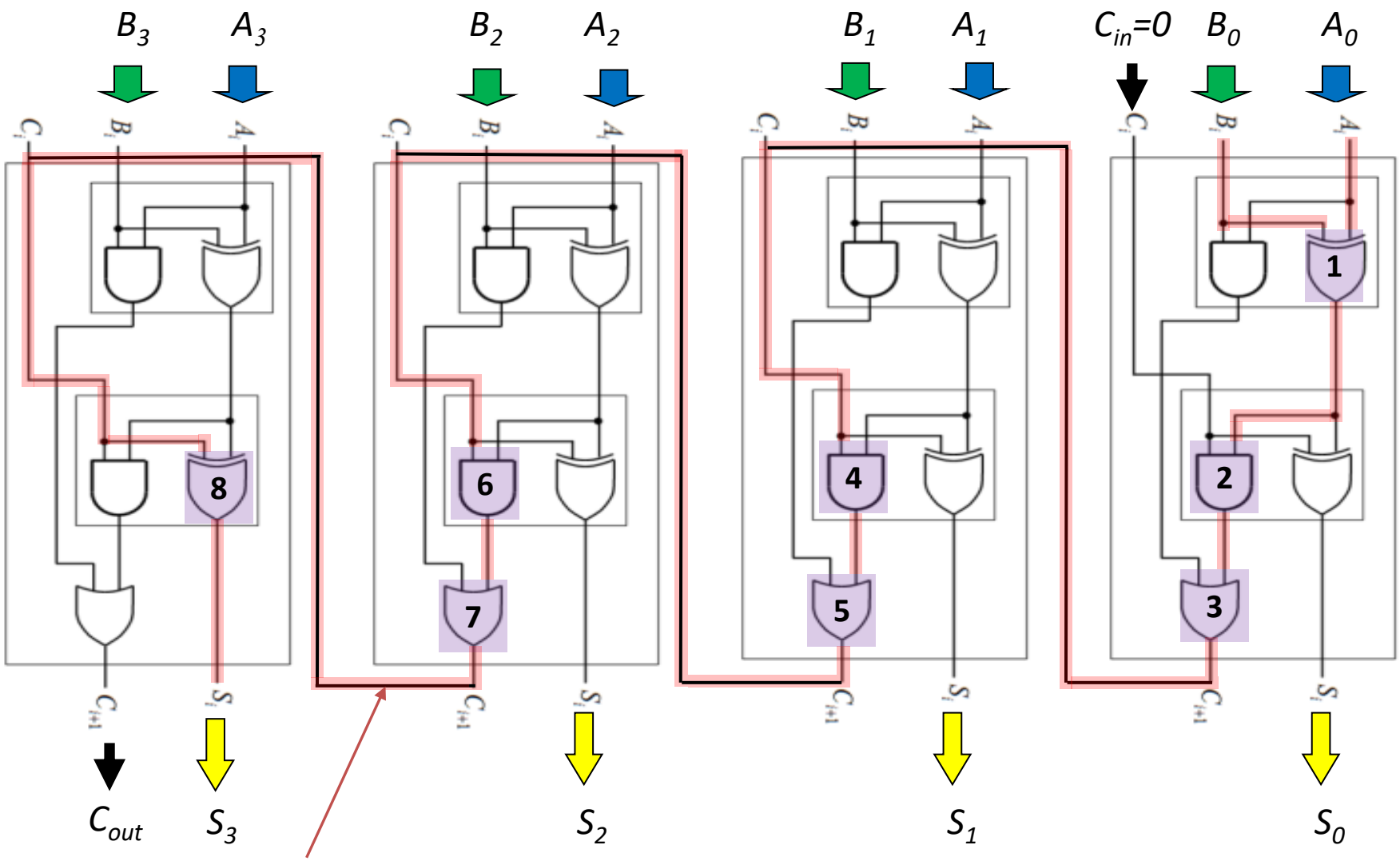

- Longest path has 8 gates delay

Comparator (1-bit)

Comparing two 1-bit numbers (A and B) needs to derive ***3 outputs (A>B, A=B, A<B)***, this can be easily tabulated in a truth table below:

Inputs		Outputs		
B	A	Z: A > B	Y: A = B	X: A < B
0	0	0	1	0
0	1	1	0	0
1	0	0	0	1
1	1	0	1	0
		$Z = A.\overline{B}$	$Y = \overline{A \oplus B}$	$X = \overline{A}.B$

Logic Gate Realization

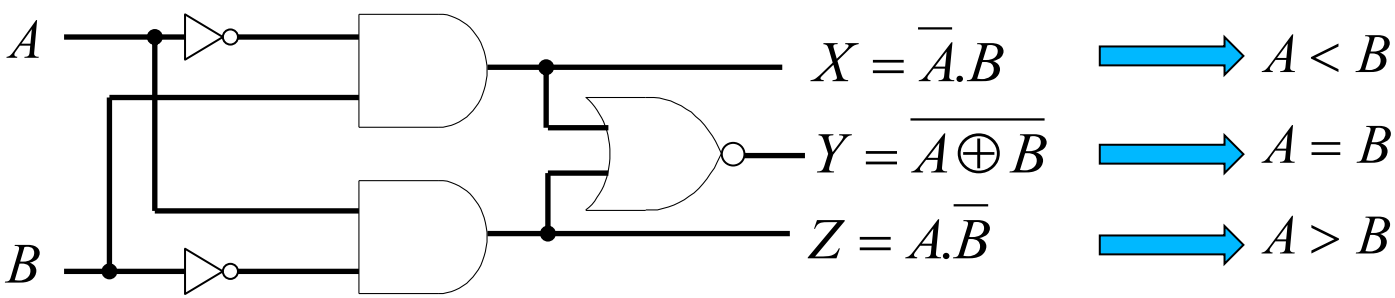

Sequential Circuit: D Flip-Flop

D-flip flop is just a 1-bit memory. It stores the input data until the next clock trigger.

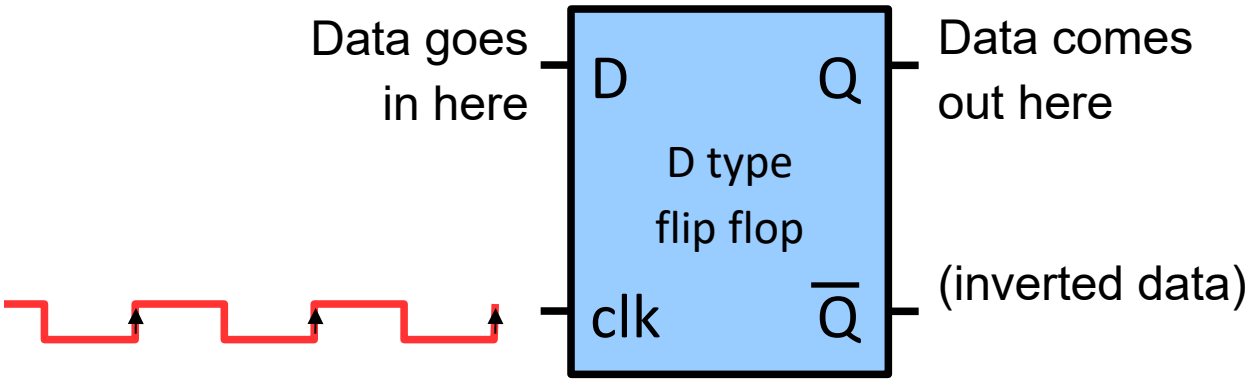

The output Q will update its value only at the rising edge of the CLK. Until the next rising CLK edge occurs, Q will retain its previous value (i.e., Q will remain HIGH during the shaded time segment, though input D has changed to LOW, because Q will change to HIGH only at the rising CLK edge).

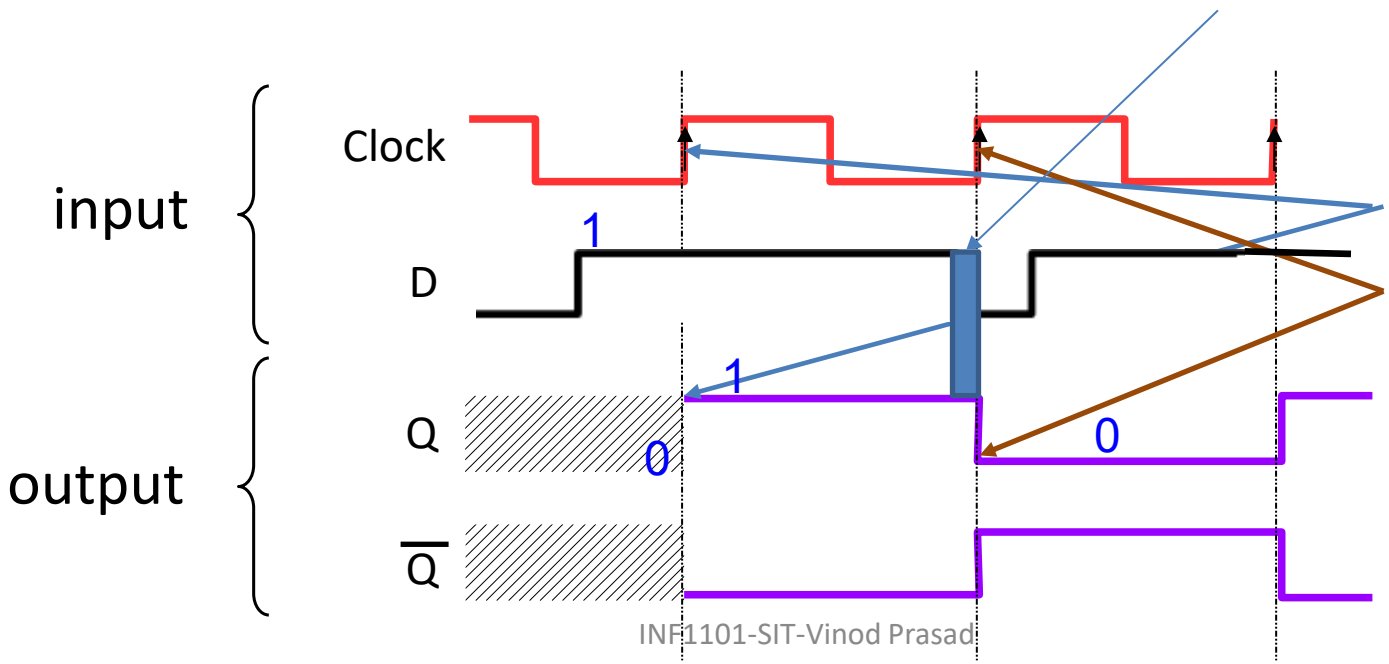

Output Q is updated based on input D at the rising edge of the CLK.

D Flip-Flop

We usually represent this in a **truth table** (just like logic gates, half adders and full adders):

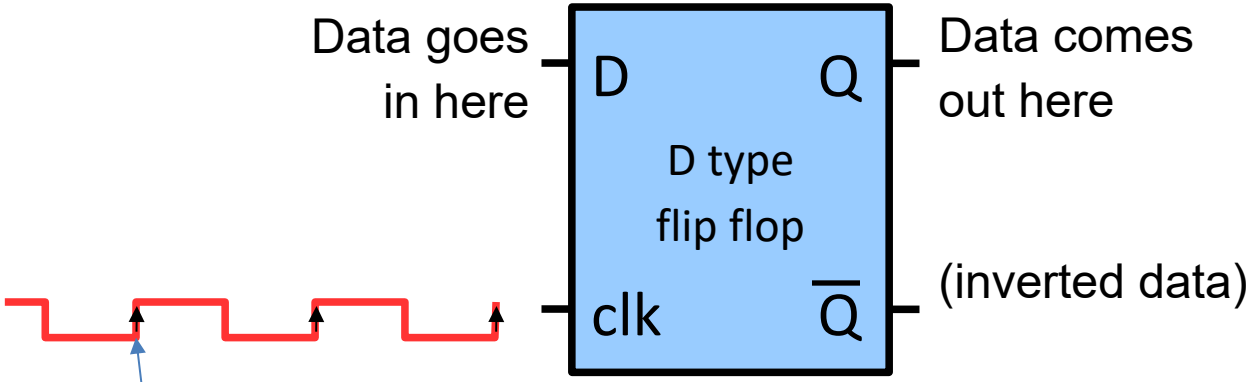

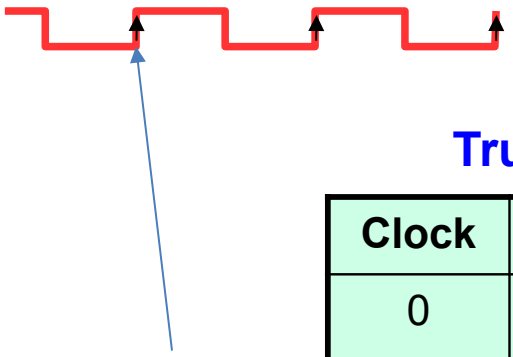

Truth table of D flip flop

Clock	D	Q
0	0	Unchanged (last value of Q)
0	1	Unchanged (last value of Q)
↑ 1	0	0
↑ 1	1	1

Shift Register

- A ***shift register*** performs bitwise operation that shifts all the bits of its operand.

- The two base variants are the ***logical left shift*** and the ***logical right shift***.
- This is further modulated by the number of bit positions a given value shall be shifted, such as ***shift left by n-bit*** or ***shift right by n-bit***.

Shift left by *n*-bit will multiply the number by 2^n (binary numbers are base-2 numbers)

Shift right by n-bit will divide the number by 2^n.

- Unlike an arithmetic shift, a logical shift does not preserve a number's sign bit; every bit in the operand is simply moved a given number of bit positions, and the vacant bit-positions are filled, usually with zeros.

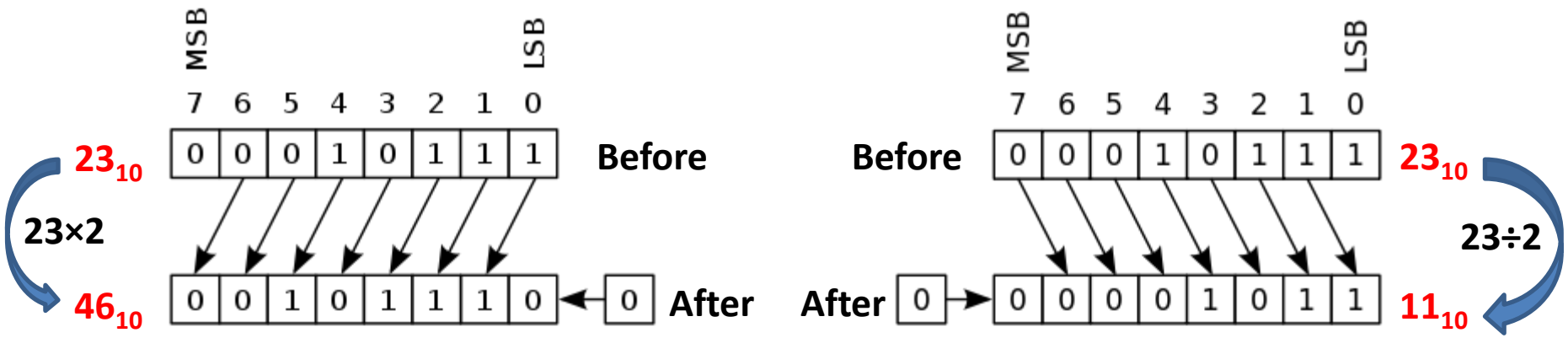

Shift left by 1-bit ***Shift right by 1-bit***

Shift Register using D Flip-Flops (Serial-In Serial-Out)

Shift Register is a group of flip-flops used to store multiple bits of data. The bits stored in such registers can be made to move within the registers and in/out of the registers by applying clock pulses (synchronous). An *n*-bit shift register can be formed by connecting *n* flip-flops where each flip-flop stores a single bit of data.

4-bit Shift RIGHT Register

Data: 1010

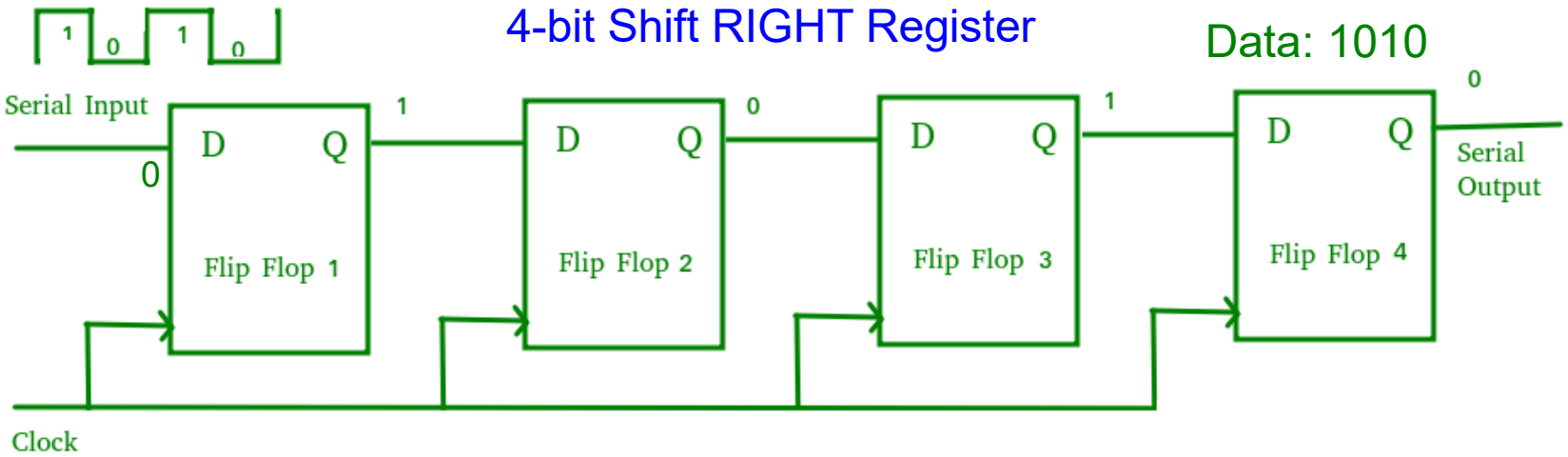

Shifted RIGHT at the rising edge of the Clock.

Data: 0101

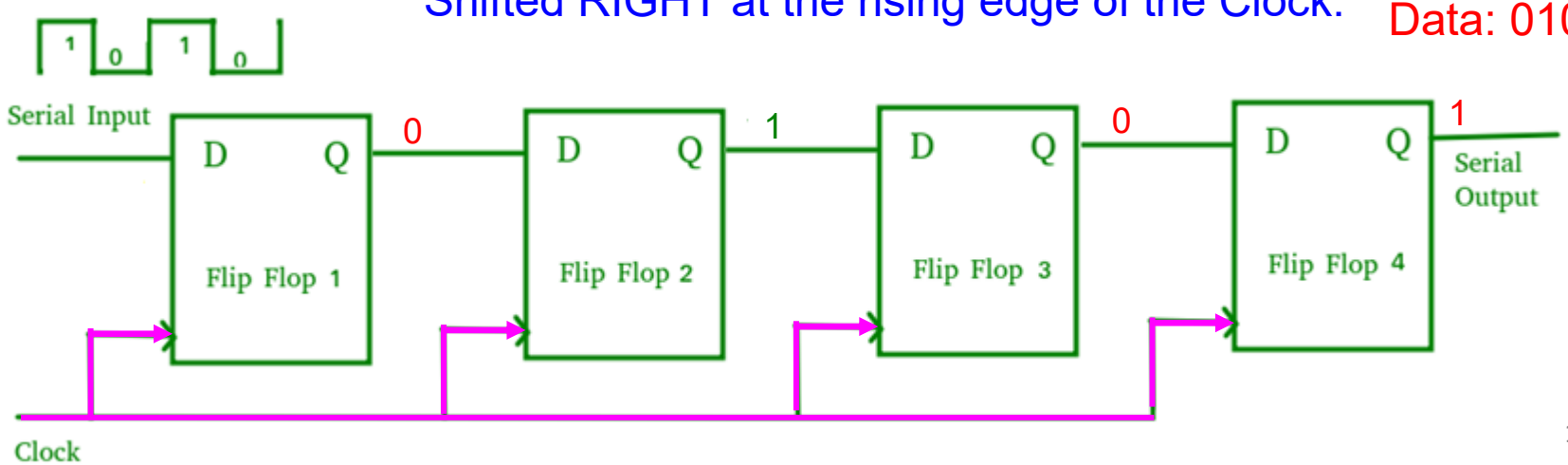

Shift Register (Serial-In Parallel-Out)

Allows serial input (one bit after the other through a single data line) and produces a parallel output.

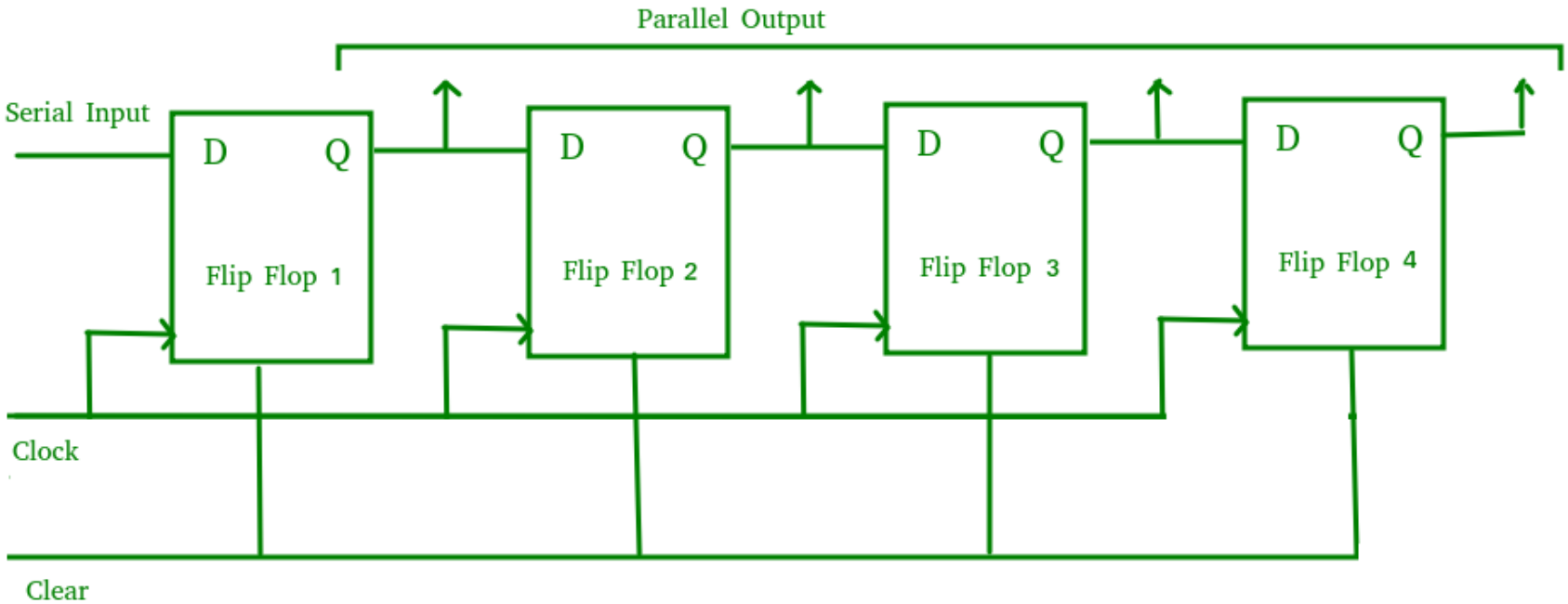

The clear (CLR) signal is connected in addition to the clock signal to all the 4 flip flops in order to RESET them.

All the flip-flops are synchronous with each other since the same clock signal is applied to each flip-flop.

Use: To convert serial data into parallel data - application in communication lines where demultiplexing of a data line into several parallel lines is required.

Shift Register (Parallel-In Parallel-Out)

Allows parallel input (data is given separately to each flip flop and in a simultaneous manner) and also produces a parallel output.

There are no interconnections between the individual flip-flops since no serial shifting of the data is required. Data is given as input separately for each flip-flop and in the same way, output also collected individually from each flip-flop.

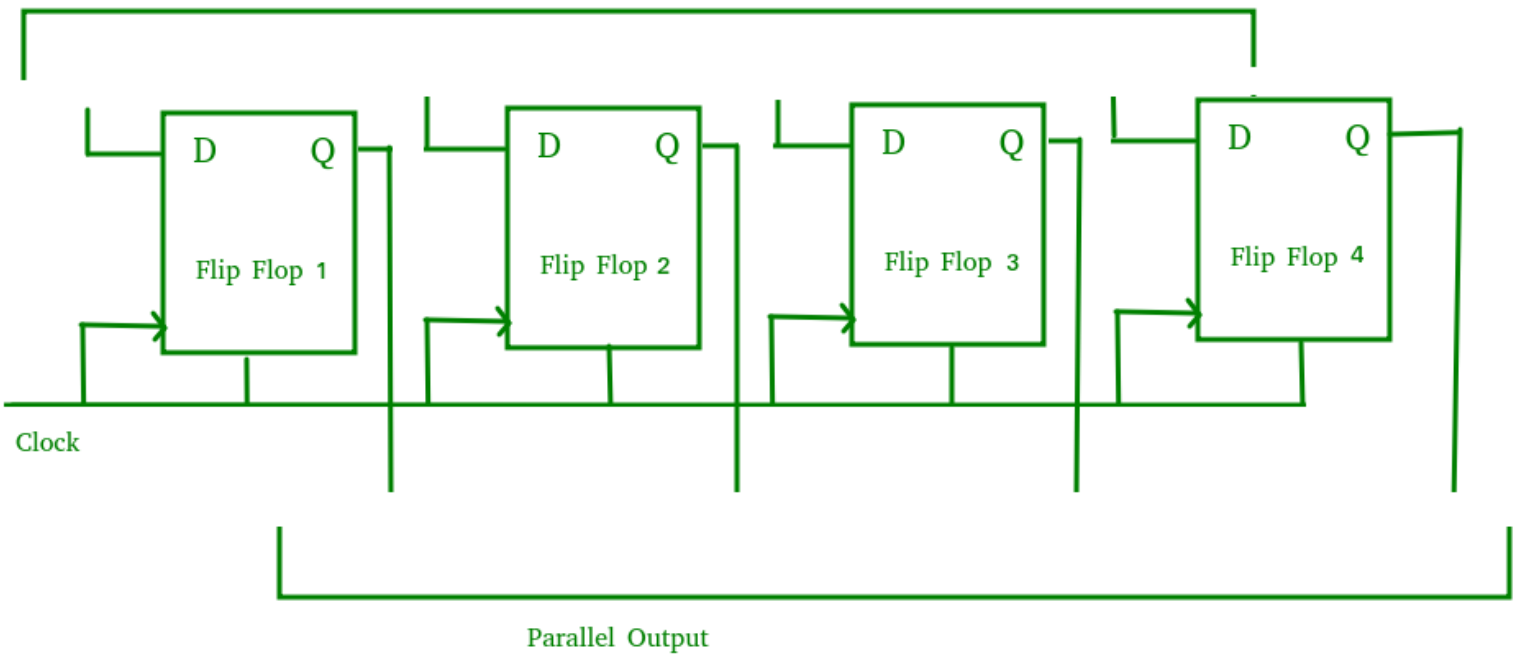

Use: As a temporary storage device and also as a delay element.

High-level design and implementation

- **FPGA:** Field Programmable Gate Array
  - A ***field-programmable gate array*** (***FPGA***) is an integrated circuit designed to be configured by the customer or designer after manufacturing—hence "field-programmable".
  - Main manufacturers: Xilinx, Altera
- **ASIC:** Application Specific Integrated Circuit
  - An ***application-specific integrated circuit*** (***ASIC***) is an integrated circuit (IC) customized for a particular use, rather than intended for general-purpose use.
  - Main suppliers:
    - Integrated device manufacturer (IDM) ASIC suppliers: TSMC, SMIC, Global Foundries, etc
    - Fabless ASIC suppliers: Broadcom, Delta, Nvidia

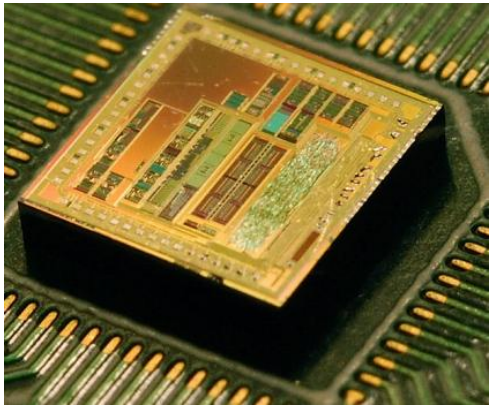

Hardware Description Languages (HDL)

- As designs grew larger and more complex, designers began using gate-level models described in a Hardware Description Language (HDL) to help with verification before fabrication.

- When designers began working on 100,000 gate designs, these gate-level models were too low level for the initial functional specification and early high level design exploration.

- Designers again turned to HDLs for help – abstract behavioral models written in an HDL (Verilog or VHDL) provided both a precise specification and a framework for design exploration.

- This is similar to the software concept of reusability by building libraries or IP.

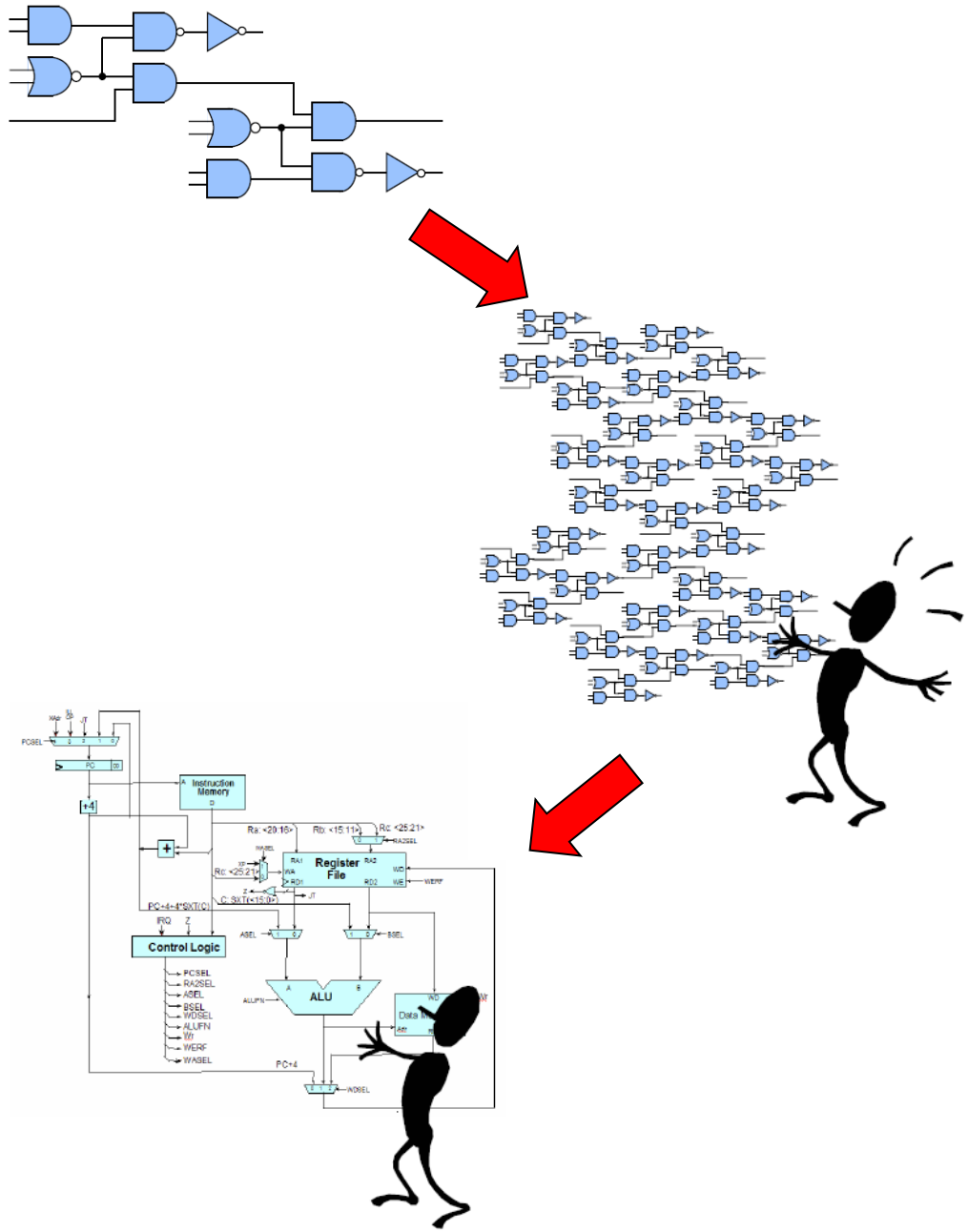

Summary

- Arithmetic Circuit - Half-adder, full-adder, ripple carry adder
- Comparator
- Shift Register
- Basic memory element: D-flip-flop,
- High-Level Design and Implementation